ASSEMBLY INSTRUCTIONS

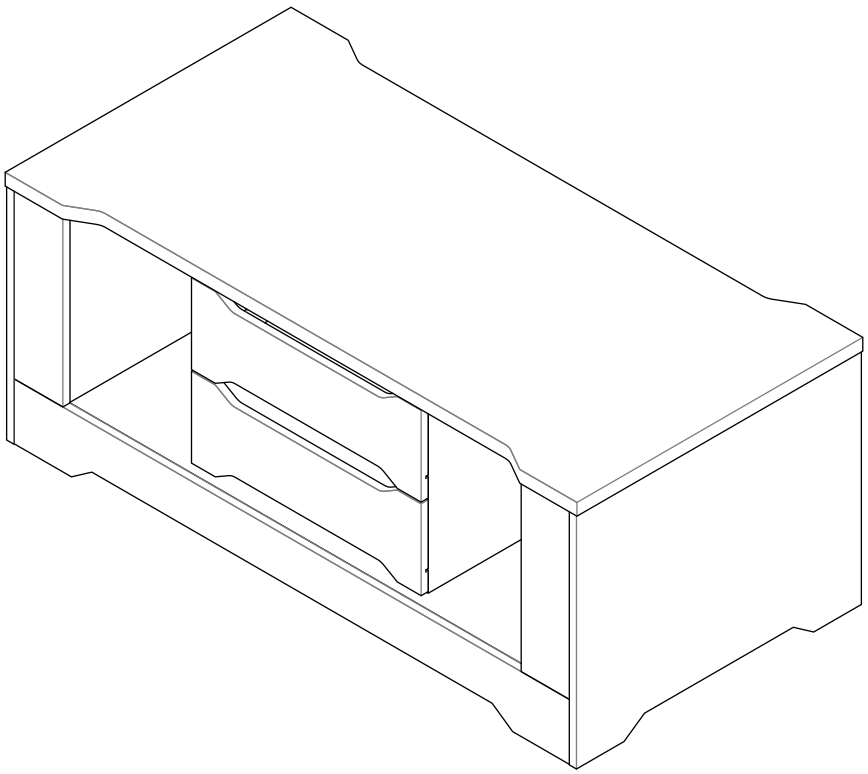

ASSEMBLY RATING

The Assembly Rating is a 5-point system that shows the degree of effort needed in assembling a specific product (with 1 being easy and 5 being difficult). For most products, two persons are recommended.

EASY ●●●◎◎ **DIFFICULT**

Tools Required for Assembly

Allen Wrench



(Included)

Phillips Screwdriver

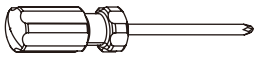

(Not Included)

Hammer



(Not Included)



2 PERSON RECOMMENDED

16.12.27

ASSEMBLY & CARE ADVICE

FOR YOUR FURNITURE TO LAST, CORRECT ASSEMBLY AND PROPER MAINTENANCE ARE NECESSARY.
PLEASE FOLLOW THE INFORMATION PROVIDED BELOW TO FULLY ENJOY YOUR FURNITURE.

BASIC ASSEMBLY TECHNIQUES



It is highly recommended that the assembly should be done near the area of its intended location. Make sure you have enough space to move around during the assembly.

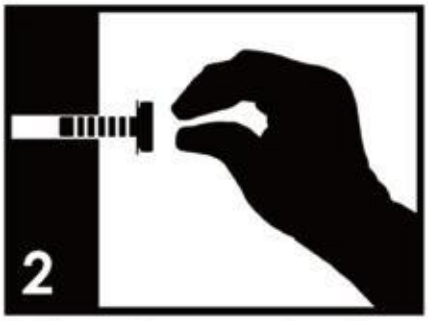

Position each part correctly and insert screws or bolts into their respective holes by hand tighten or using the proper hand tool. Only tighten when step is completed or when instructed to do so.



Use cardboard or carpet area when assembling furniture to prevent scratches . Make sure the furniture rests on a flat and level surface with each leg evenly touching the floor.

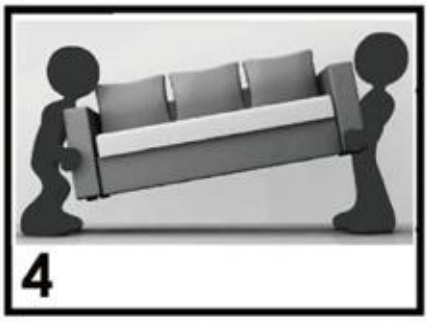

ALWAYS have at least two people to help with transporting and assembling the product to avoid any potential injury and/or damage.

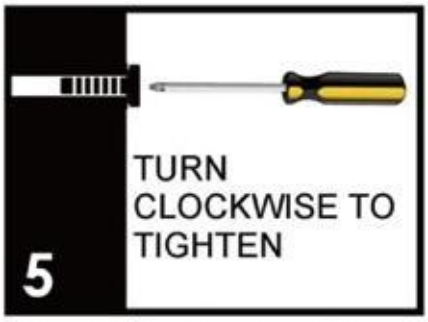

Make sure all parts are properly aligned, then use the appropriate hand tool to completely tighten the bolts or screws. Do not use power tools and do not overtighten.



Save the instructions and store any supplied tool for later maintenance. After two weeks, check and tighten any loose hardware and repeat again every six months thereafter.

IT IS THE USER'S RESPONSIBILITY TO MAINTAIN THE FURNITURE. THE HARDWARE MAY LOOSEN OVER TIME AND MAY CAUSE THE FURNITURE TO BE WOBBLY AND UNABLE TO SUPPORT ITS INTENDED WEIGHT CAPACITY. THIS MAY LEAD TO COLLAPSE AND MAY CAUSE SERIOUS INJURY.

FAILURE TO FOLLOW THE GUIDELINES ABOVE MAY RESULT IN INJURY AND/OR PROPERTY DAMAGE.

PRE-ASSEMBLY INTRODUCTION

Unless you are particularly adept at assembling flat-pack/knock-down furniture, we understand building ready-to-assemble furniture can be a frustrating experience for some. To help avoid confusion and to make the assembly process quicker and smoother, we have provided some helpful tips. Before you begin the assembly, please read the following:

1. Due to the size and/or weight on most of the ready-to-assemble furniture, it is highly recommended that the assembly should be done near the area of its intended location. Make sure you have enough space to move around during the assembly. ALWAYS have at least two people to help with transporting and assembling of the product to avoid any potential injury and/or damage.
2. To protect from damage, assemble the item on a clean, protective surface, such as on a carpet or cardboard.
3. Make sure you have taken all the parts and hardware out of their packaging. Do not throw away packaging material until assembly is completed.
4. Make sure all parts and hardware are accounted for by comparing the actual parts and hardware to the list provided in the assembly instructions. Also check for any irregularity such as crack, flaw or improperly drilled hole. If there is any problem or missing piece, please contact the manufacturer or the supplier. Please have the model number, part number and a brief description of the problem ready will help expedite the replacement process.
5. Read the entire instruction manual and view the diagrams first before assembling. Arrange your parts in order of use and group the identical hardware together to make it easier to grab each piece as you begin to assemble.
6. During the assembly process, make sure all parts are properly aligned before tightening with the tool provided or required for the assembly. Do not use power tools and do not over tighten.
7. When applying glue to the wood dowels to bond the parts together, please be ABSOLUTELY certain that the parts are correct and lined up with each other (refer to diagrams and take notice of the various pre-drilled hole locations). When in doubt, assemble the parts together first and if the parts fit right, then apply glue to the wood dowels.

CAM LOCK FASTENER ASSEMBLY INSTRUCTIONS



Note: Every cam lock bolt must have a cam lock connector in order to fasten the parts together.

(1) Secure the threaded end of the cam bolt by using a screwdriver.

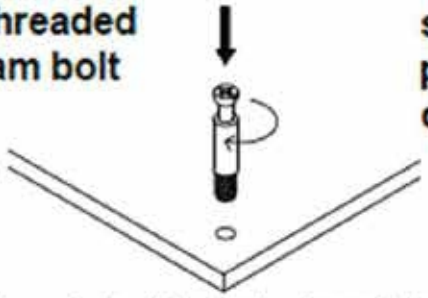

Turn right (clockwise) to tighten.

Align the cam connector with its side opening (or arrow) pointing to the small drilled hole.

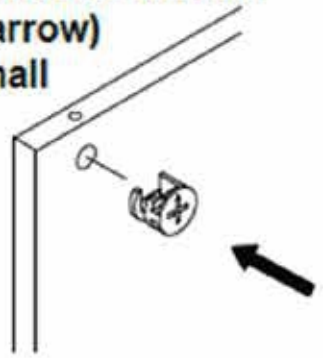

(2)

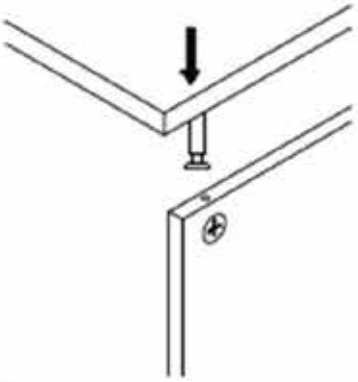

Insert the cam lock bolt into the pre-drilled hole above the cam connector.

(3) Two parts should fit snugly against each other.

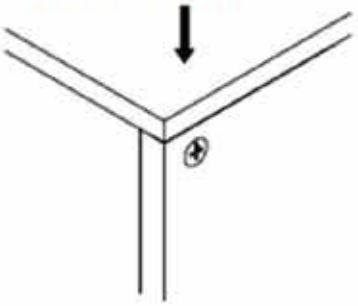

(4)

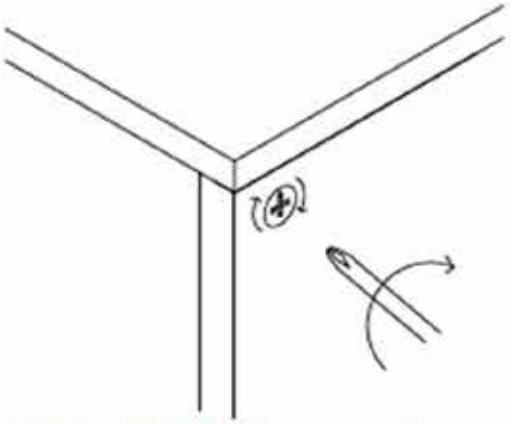

Turn right (clockwise) to tighten.

Turn the cam connector with a screwdriver until it will not turn any more with light to moderate force.

COFFEE TABLE
ASSEMBLY INSTRUCTIONS

Please keep for future reference

PARTS LIST



Before you begin, please read "Assembly and Care Advice","Pre-Assembly Introduction" and "Cam Lock Fastener Assembly Instructions"

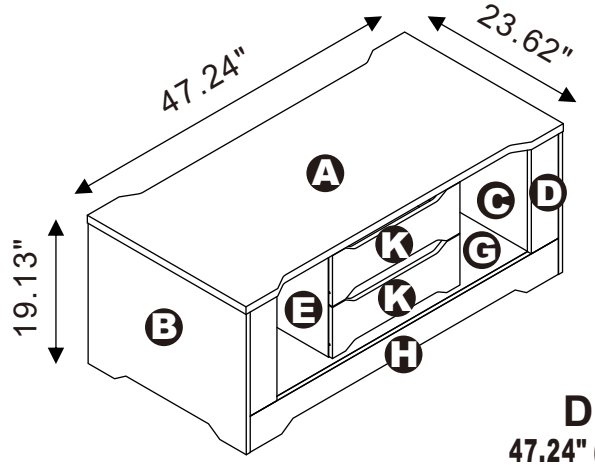

DIMENSIONS
47.24" (W) X23.62" (D) X19.13" (H)

A 1PC

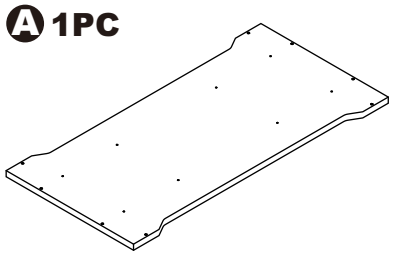

E 1PC

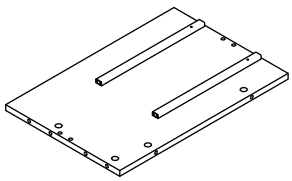

I 2PCS

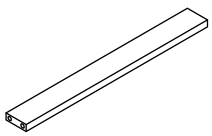

M 2PCS

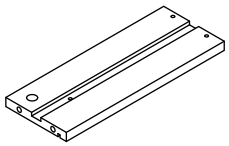

B 2PCS

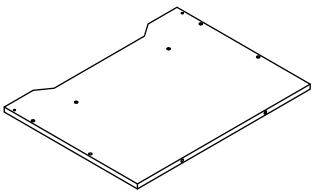

F 1PC

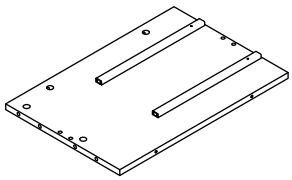

J 2PCS

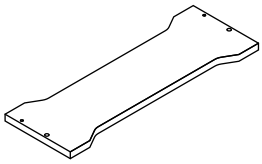

N 2PCS

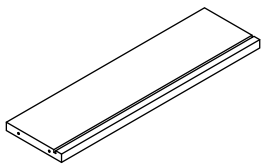

C 2PCS

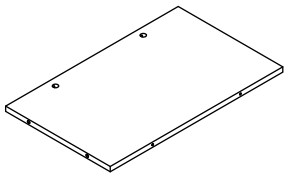

G 1PC

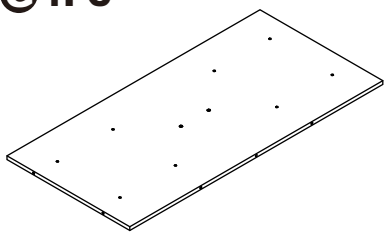

K 2PCS

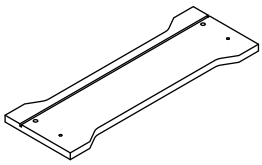

O 1PC

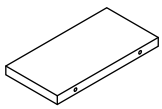

D 4PCS

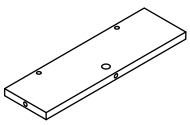

H 2PCS

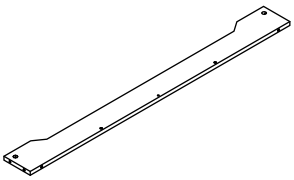

L 2PCS

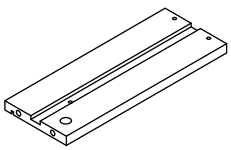

P 2PCS

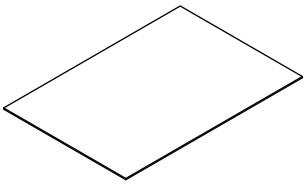

HARDWARE LIST

① 26PCS

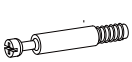

② 26PCS



③ 48PCS



④ 8PCS



⑤ 10PCS



⑥ 4PCS



⑦ 6PCS



⑧ 1PC



ASSEMBLY INSTRUCTIONS

STEP1
Hardware #1=4pcs
Hardware #2=4pcs
Hardware #3=4pcs
Hardware #4=8pcs

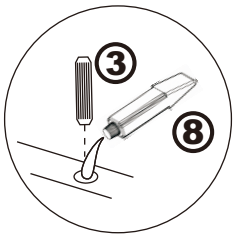

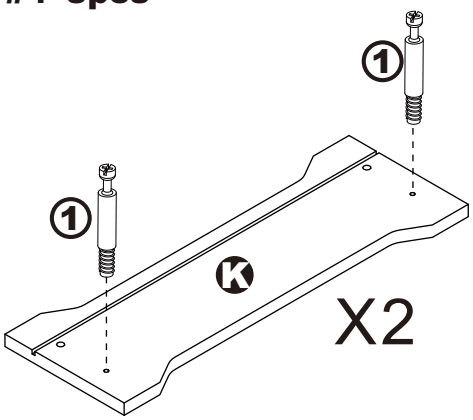

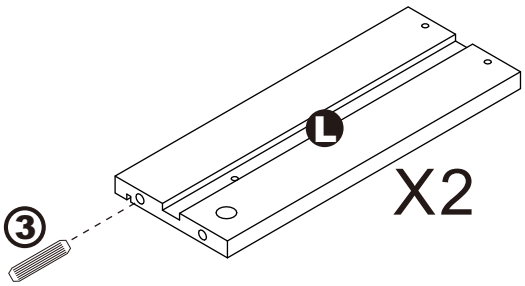

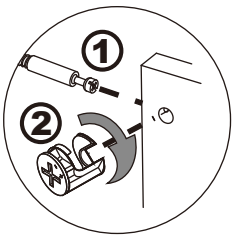

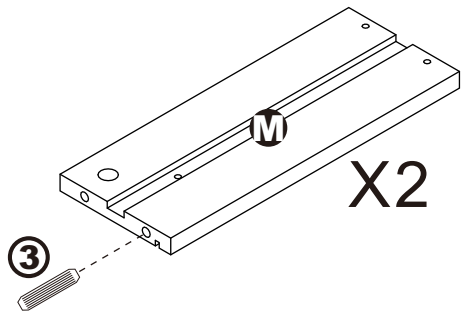

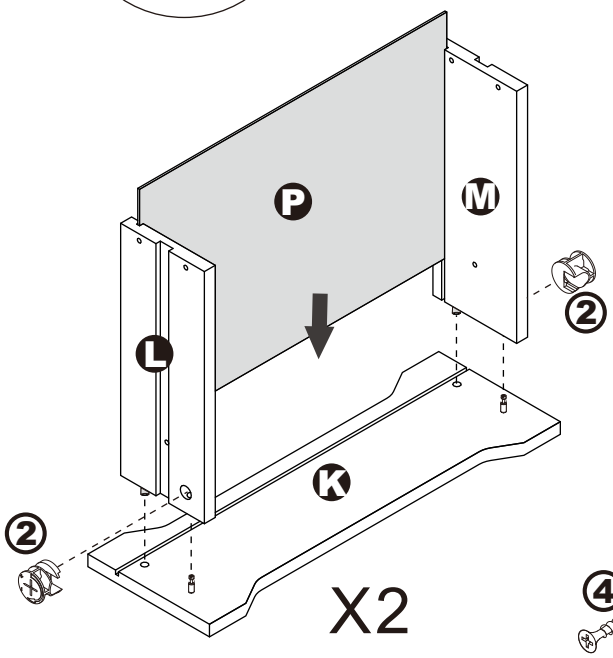

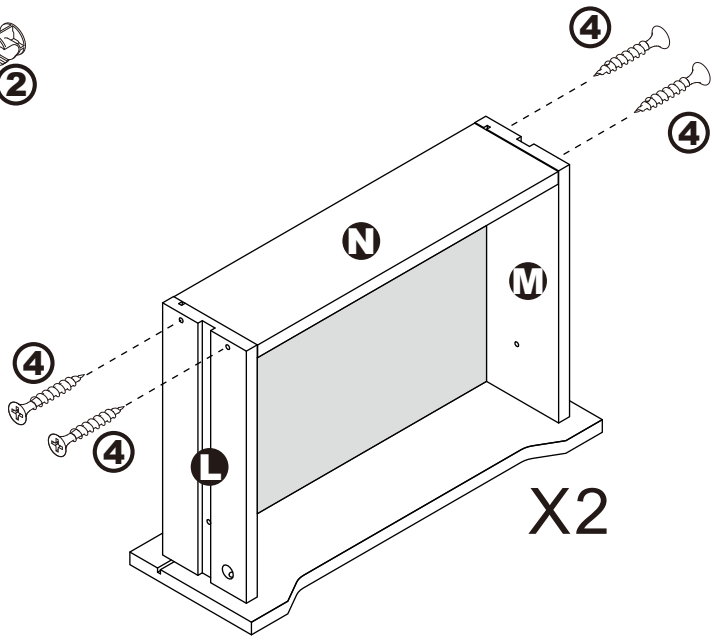

ASSEMBLY INSTRUCTIONS

STEP2
Hardware #1=22pcs
Hardware #3=44pcs

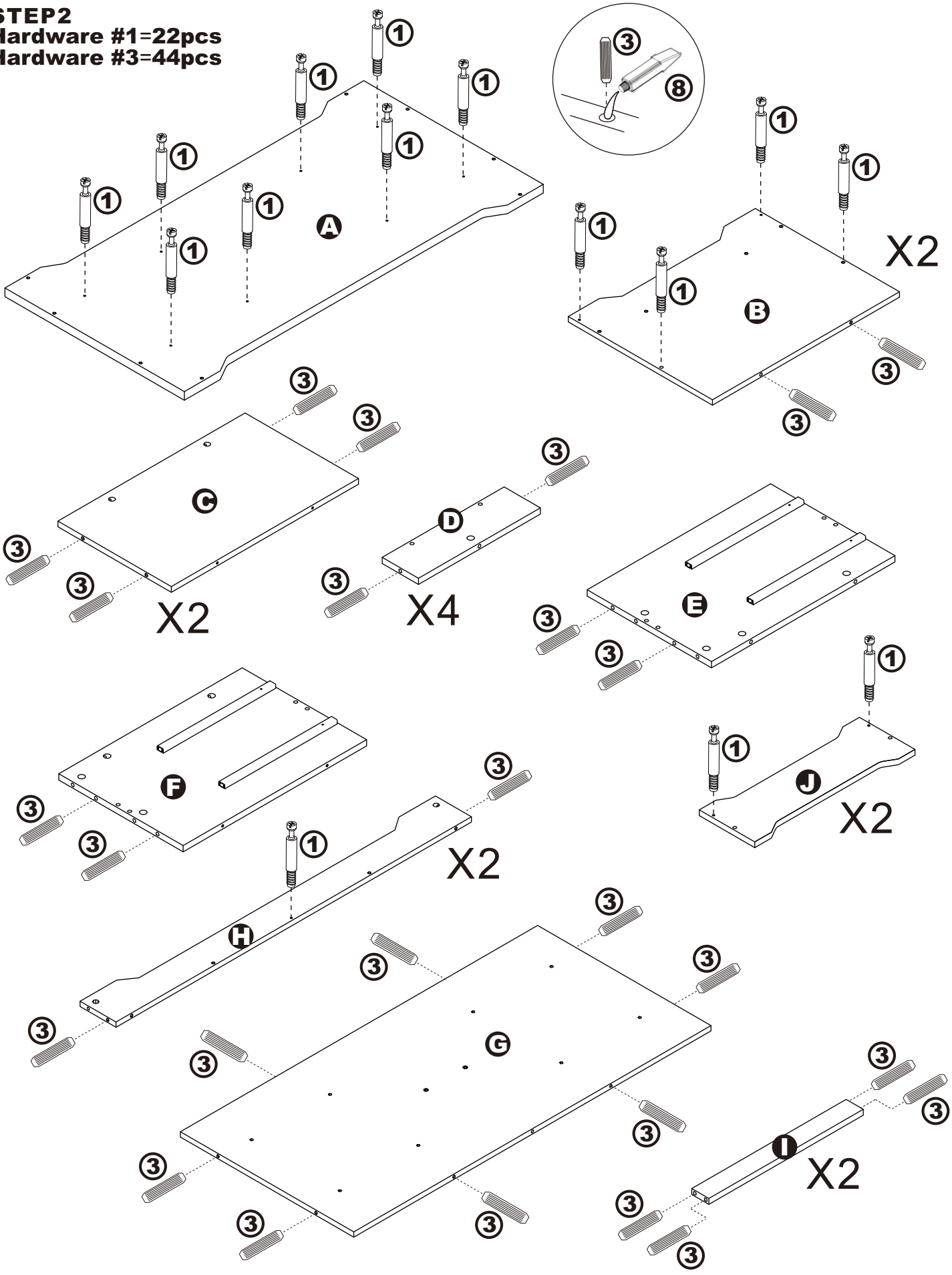

ASSEMBLY INSTRUCTIONS

STEP3
Hardware #2=6pcs
Hardware #5=2pcs

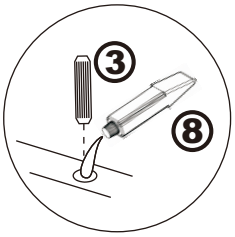

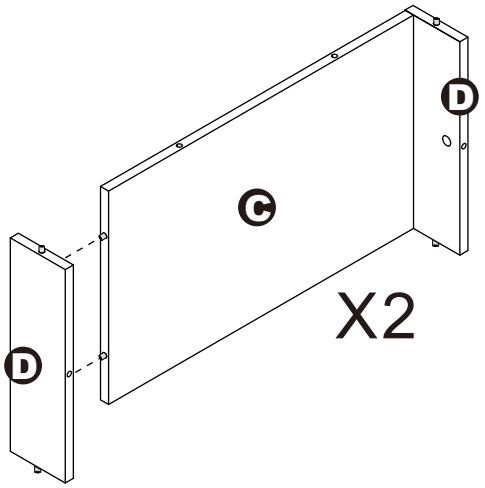

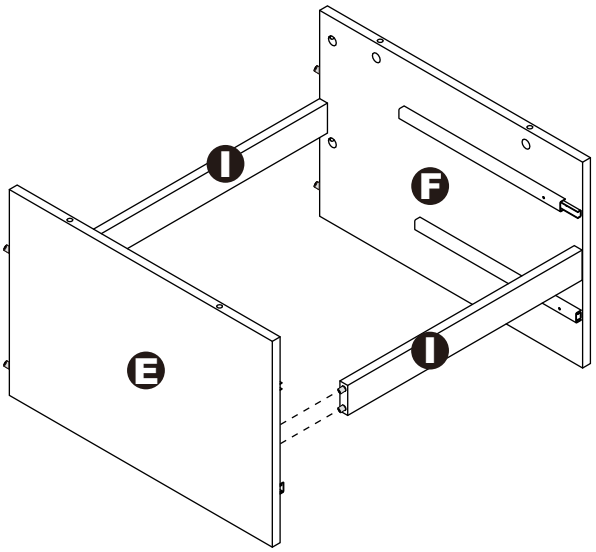

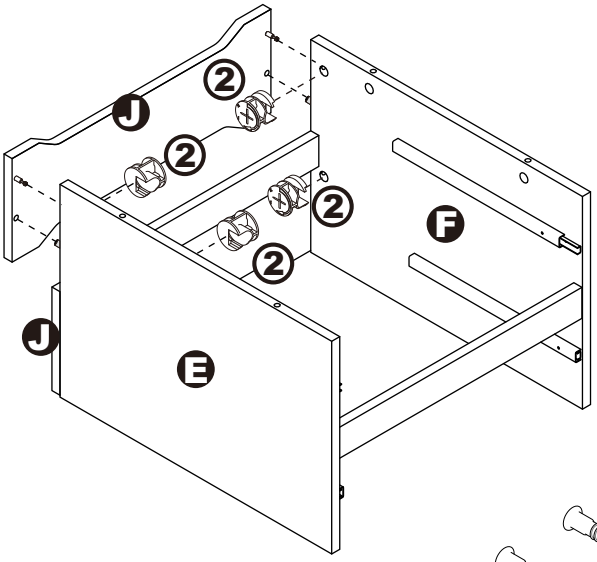

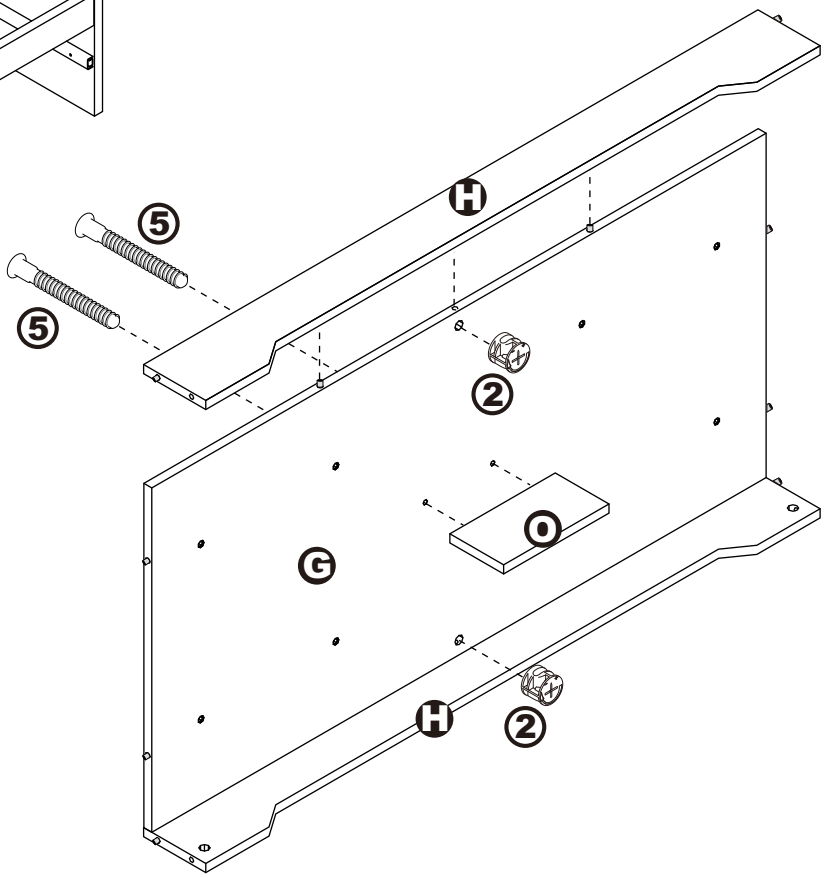

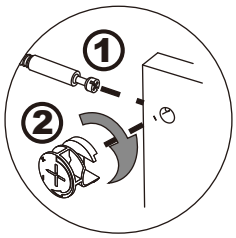

ASSEMBLY INSTRUCTIONS

STEP4
Hardware #2=4pcs
Hardware #5=8pcs
Hardware #7=6pcs

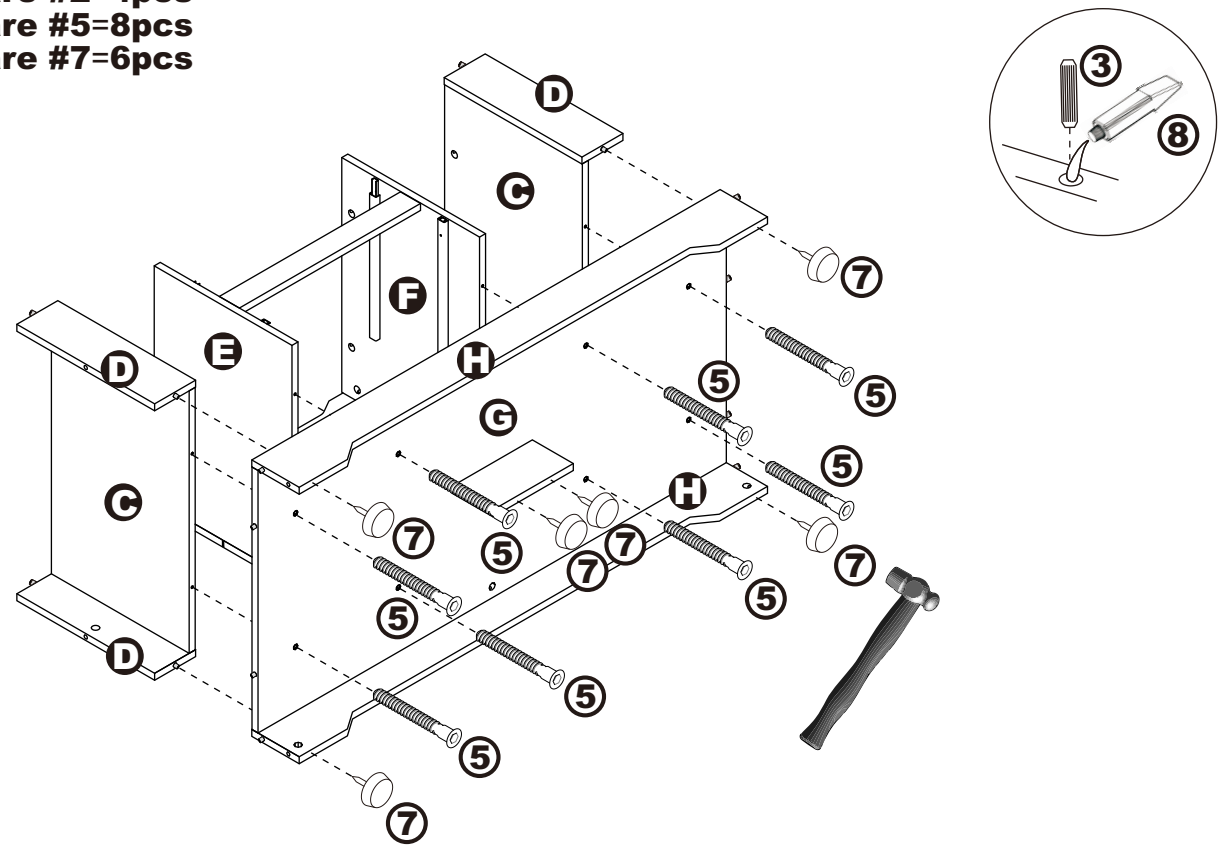

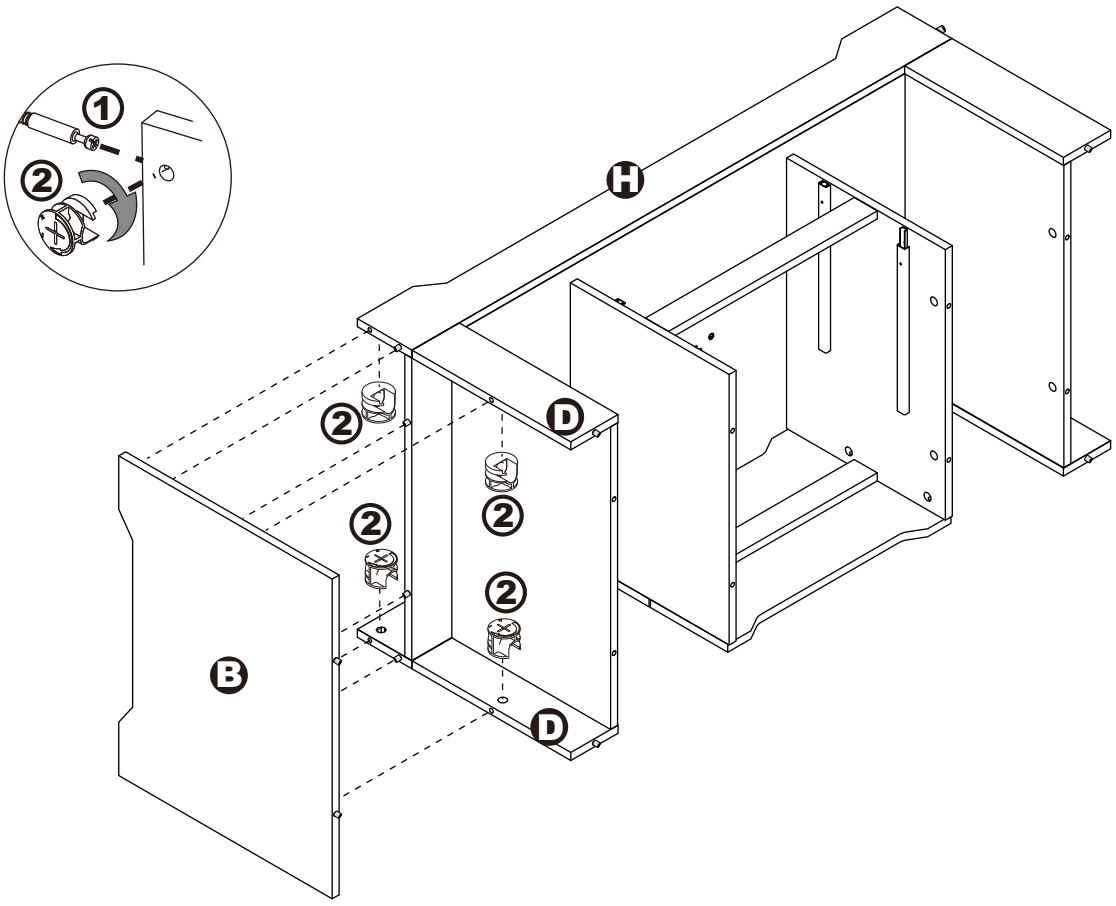

ASSEMBLY INSTRUCTIONS

STEP5
Hardware #2=12pcs

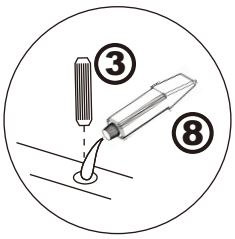

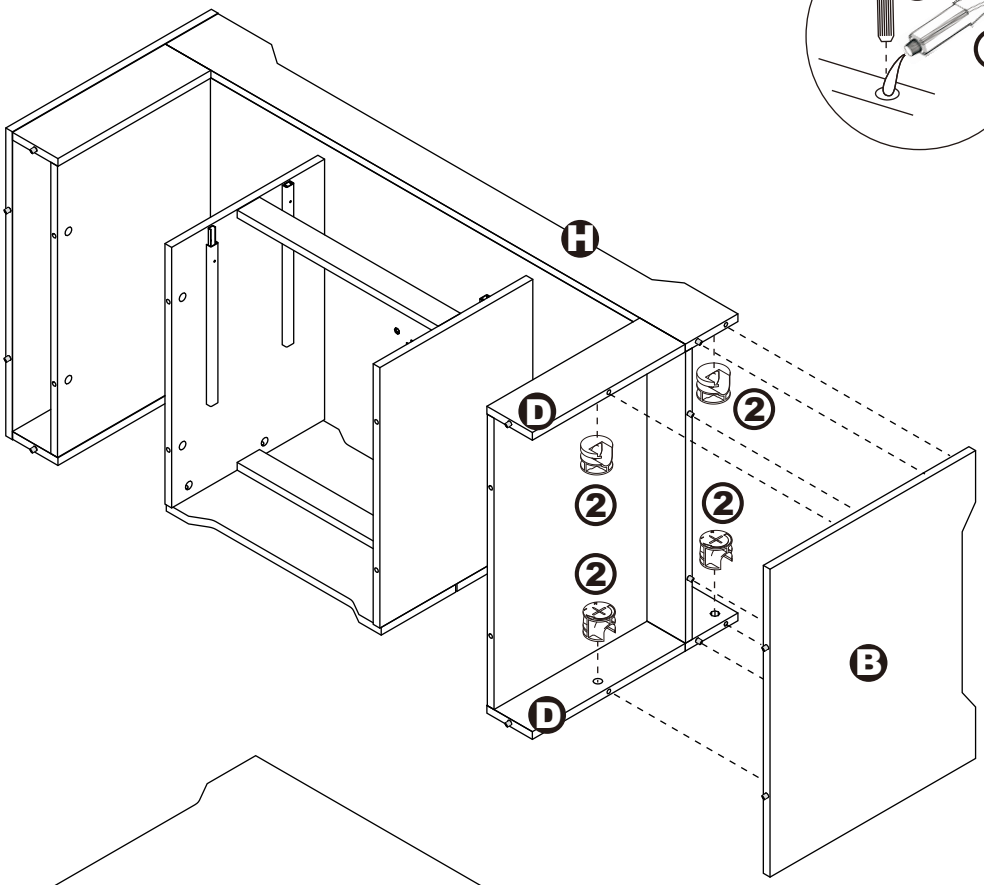

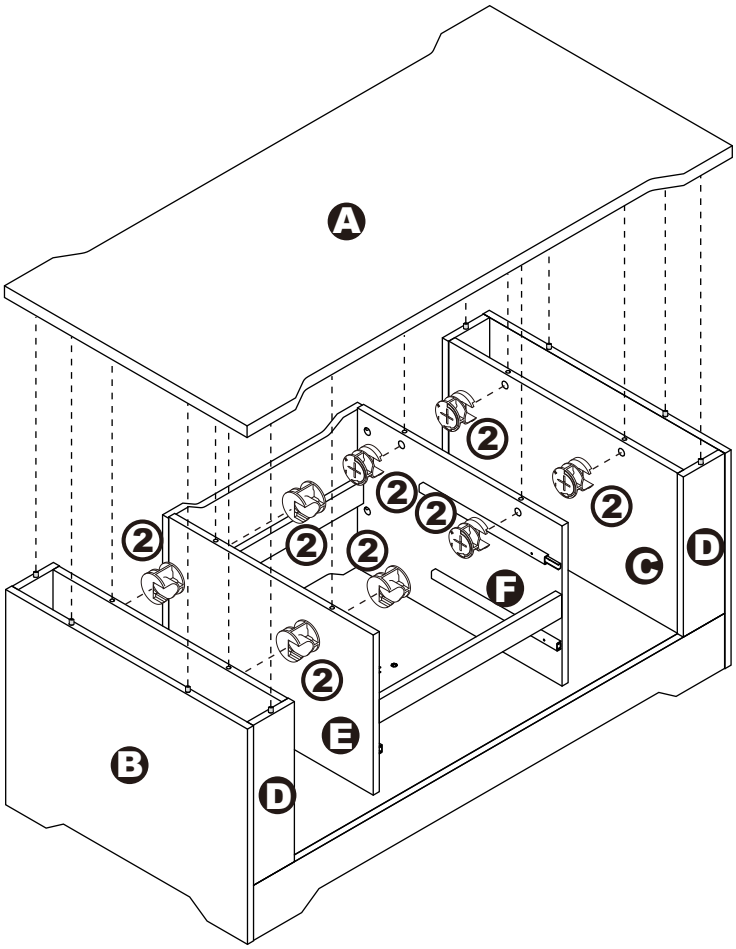

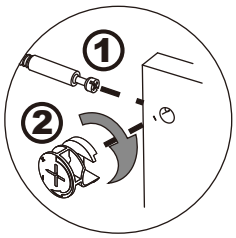

ASSEMBLY INSTRUCTIONS

STEP6
Hardware #6=4pcs

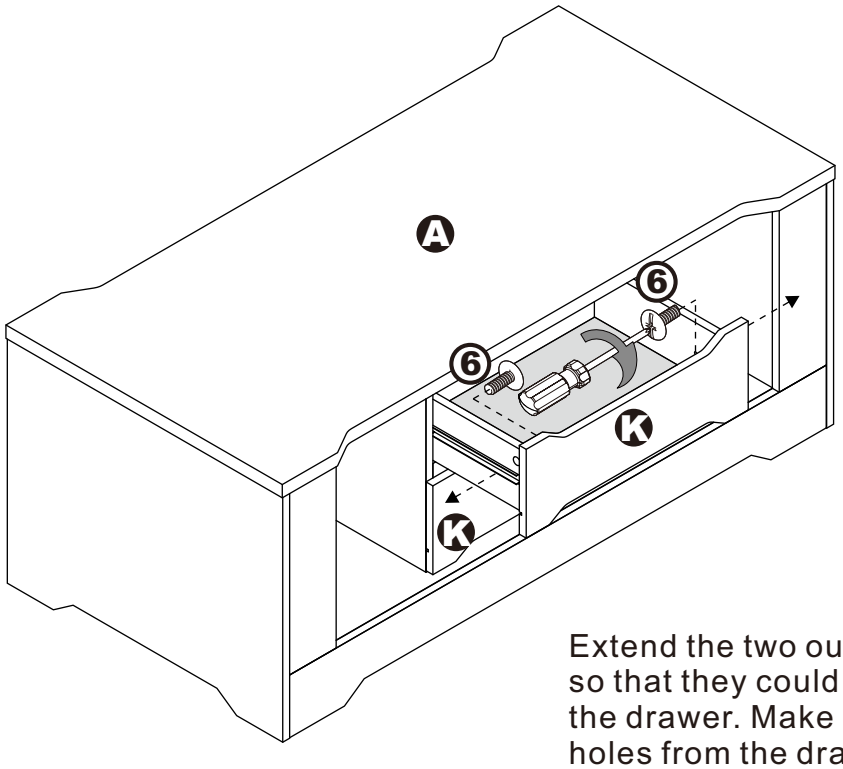

Extend the two outer slides of the runners so that they could align with the sides of the drawer. Make sure the pre-drilled holes from the drawer align with the screw holes of the outer slides.
Secure two screws from the inside of the drawer using a Phillips screwdriver to tighten them to the outer slides.

Make sure the product is rested on a flat surface and does not feel loose or wobbly. If it does, double check that the bolts/screws are secured and properly tightened.

ASSEMBLY IS COMPLETED