ASSEMBLY INSTRUCTIONS

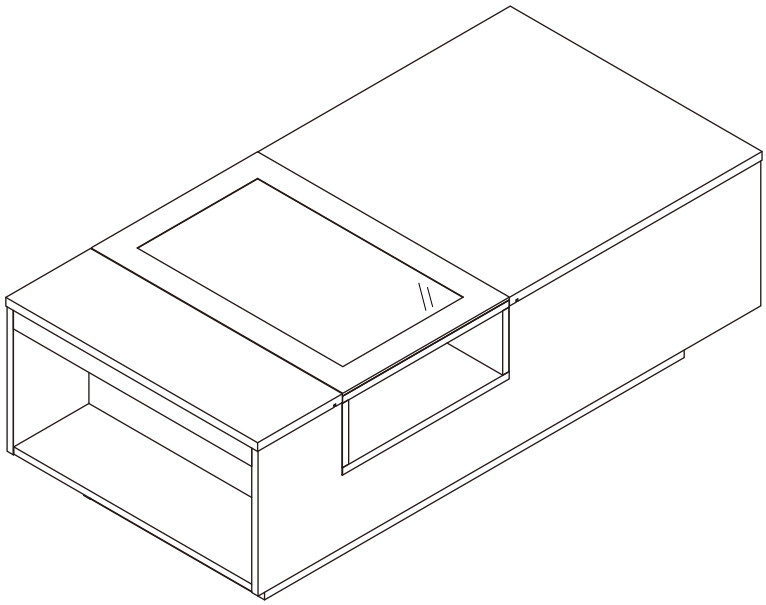

TOOLS REQUIRED



Phillips Screwdriver

(Not Included)



Hammer

(Not Included)



2 - Persons Recommended

ASSEMBLY RATING



The Assembly Rating is a 5-point system showing the level of effort needed to assemble a specific product.

VERSION # **19-01-24**

CHECK BEFORE STARTING

- [ ] **Are you missing anything?**

  Double-check all parts, hardware and accessories listed on Page 6 are accounted for.

- [ ] **Should we send any replacements?**

  Are there any irregularities or flaws in the parts? We can send replacements!

- [ ] **Check out our Quick Tips!**

  We recommend reviewing the pre-assembly handouts. Even experts need a refresher now and then!

- [ ] **Prep Time!**

  Please review the assembly instructions and all diagrams prior to assembling. Arrange parts as recommended on Page 7 and group identical hardware together to make assembling easier.

PRE ASSEMBLY INTRODUCTION

We understand building ready-to-assemble furniture can be a challenging experience for some. To help avoid confusion, we have provided some helpful tips that may speed up the process.

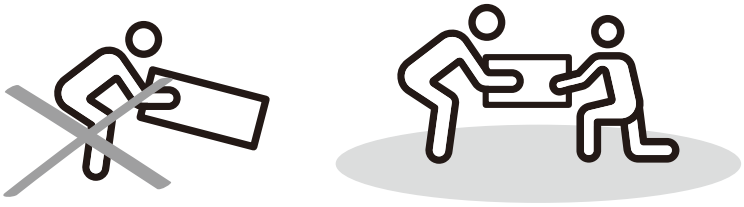

Teamwork

ALWAYS have at least two people to help with transporting and assembling the product to avoid potential injury and/or damage.

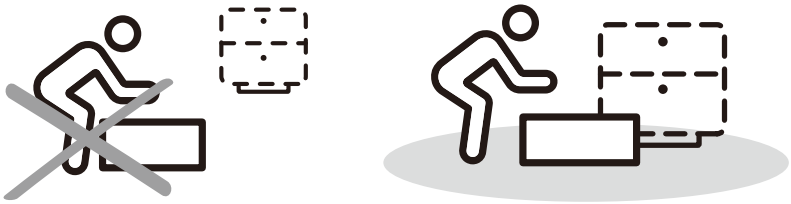

Suitable Location

Assembling near the area of the intended location is highly recommended.



Sufficient Space

Make sure you have enough space to move around during the assembly.



Avoid Scratches

Use cardboard, blankets or a carpeted area while assembling furniture to prevent scratches.

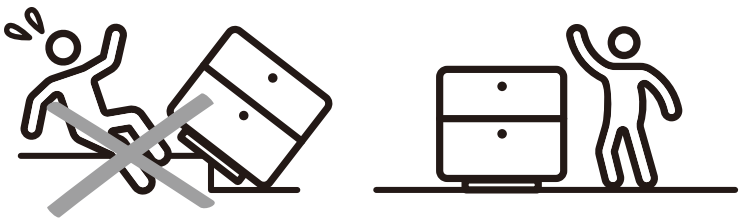

Flat Surface

Make sure the furniture rests on a flat and level surface with each leg evenly touching the floor.

ASSEMBLY AND CARE ADVICE

FAILURE TO FOLLOW THE GUIDELINES BELOW MAY RESULT IN INJURY AND/OR PROPERTY DAMAGE.



Position each part correctly and insert screws or bolts into their respective holes.

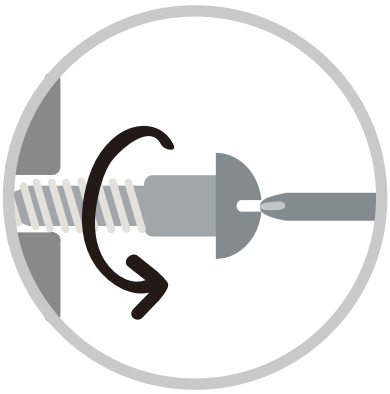

Turn clockwise to tighten and only tighten when step is completed or when instructed to do so.



Use the appropriate hand tools or power tools for assembly. Select steps, such as tightening screws and/or bolts, may require hand tools to avoid causing damage during assembly.



Save the instructions and store any supplied tools for later maintenance.

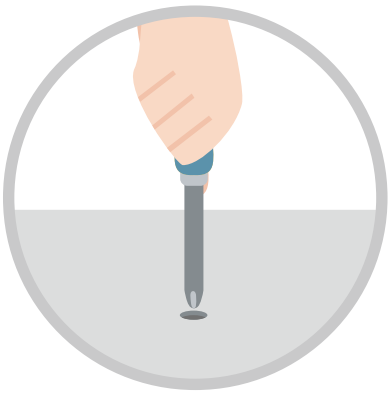

After two weeks, check and tighten any loose hardware and repeat again every six months thereafter.

IT IS THE USER'S RESPONSIBILITY TO MAINTAIN THE FURNITURE. THE HARDWARE MAY LOOSEN OVER TIME AND MAY CAUSE THE FURNITURE TO BE WOBBLY AND UNABLE TO SUPPORT ITS INTENDED WEIGHT CAPACITY. THIS MAY LEAD TO COLLAPSE AND MAY CAUSE SERIOUS INJURY.

CAM LOCK FASTENER ASSEMBLY INSTRUCTIONS

Note :
Every cam lock bolt must have a cam lock connector in order to fasten the parts together.

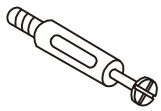
cam bolt


cam lock

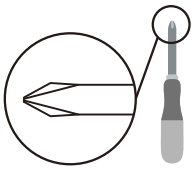
screwdriver

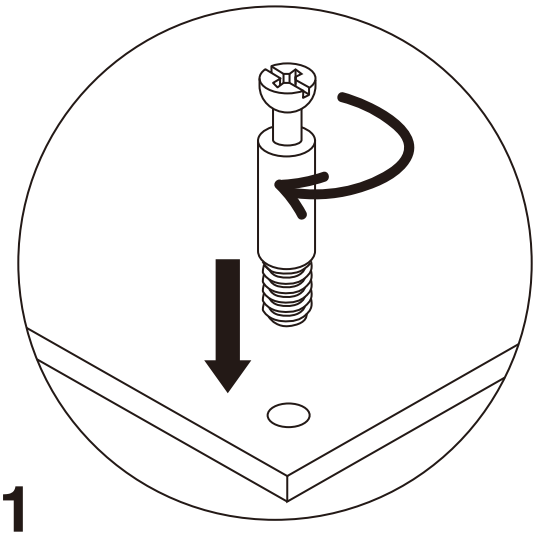

1

Screw the cam bolt into panel.

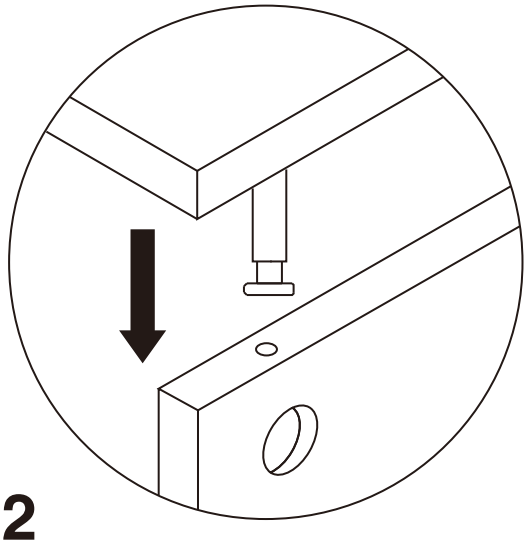

2

Insert the cam bolt into the bolt hole of joint panel.

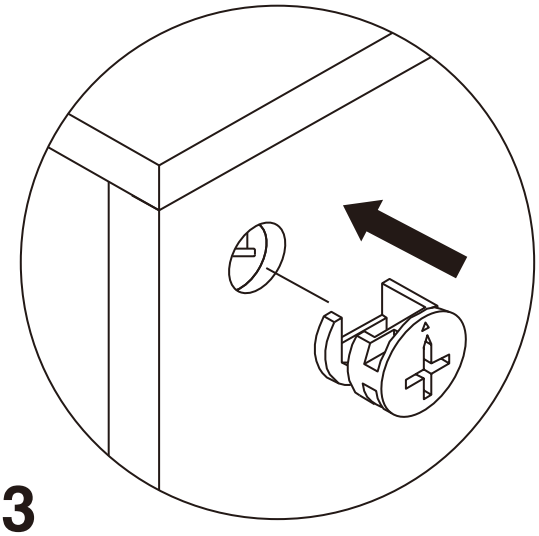

3

Align the cam lock with its side opening (or arrow) pointing to cam bolt.

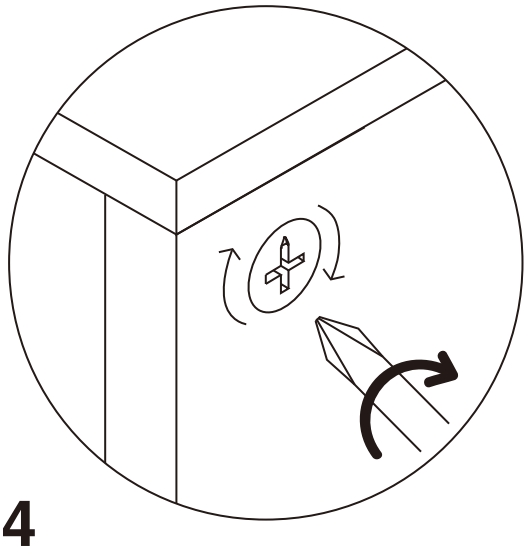

4

Turn the cam lock clockwise gently until it will not turn any more.

COFFEE TABLE

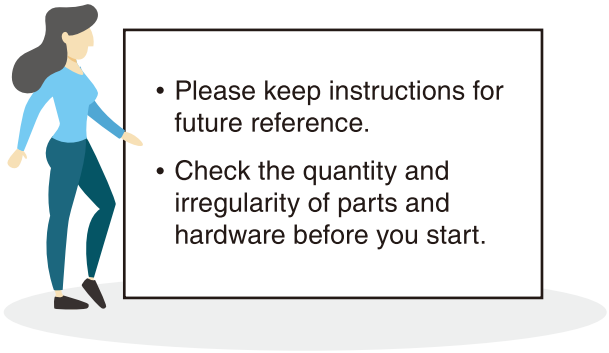

- Please keep instructions for future reference.
- Check the quantity and irregularity of parts and hardware before you start.

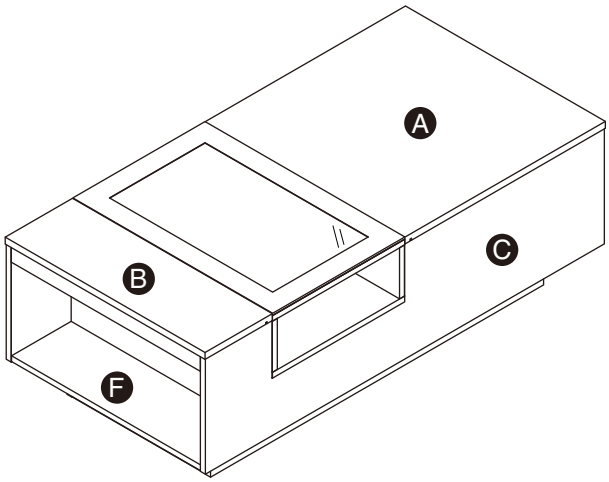

PARTS

Ⓐ 1PC

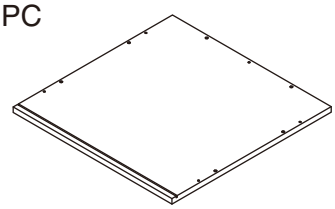

Ⓑ 1PC

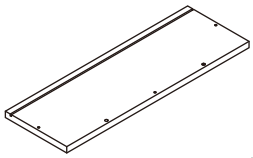

Ⓒ 1PC

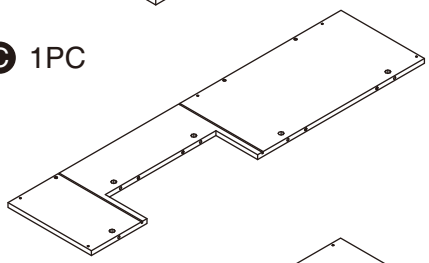

Ⓓ 1PC

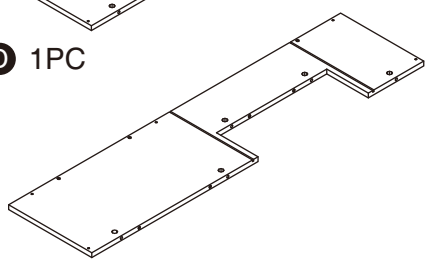

Ⓔ 1PC

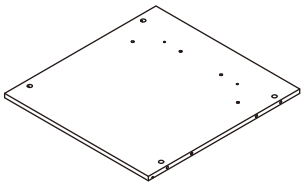

Ⓕ 1PC

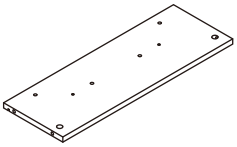

Ⓖ 2PCS

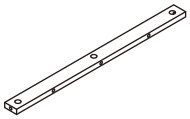

Ⓗ 2PCS

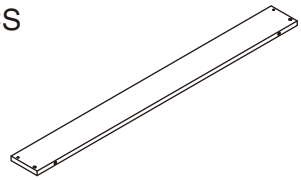

Ⓘ 2PCS

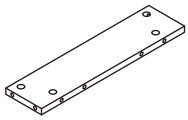

Ⓙ 1PC

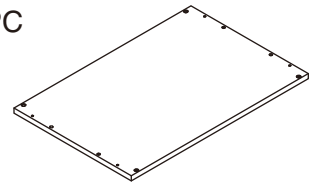

Ⓚ 2PCS

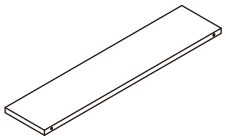

Ⓛ 2PCS

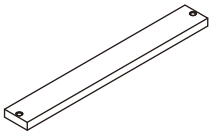

Ⓜ 2PCS

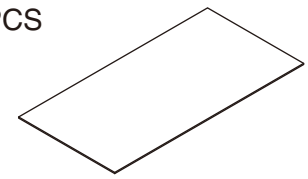

Ⓝ 1PC

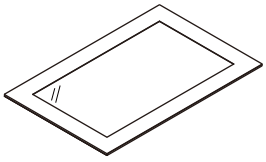

HARDWARE

① 30PCS ② 30PCS ③ 30PCS ④ 8PCS



⑤ 8PCS ⑥ 8PCS



ACCESSORIES

A1 6PCS A2 4PCS A3 1PC A4 1PC

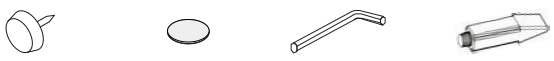

GET READY

Please group boards as below.

Ⓒ 1PC

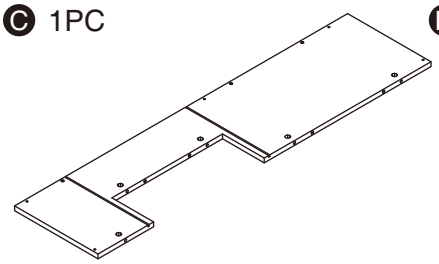

Ⓓ 1PC

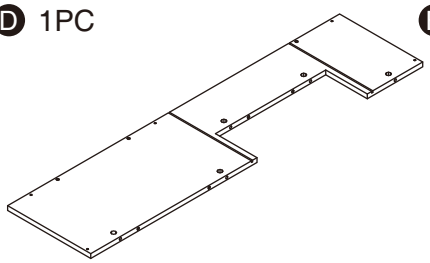

Ⓔ 1PC

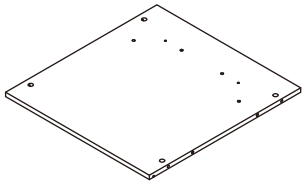

Ⓕ 1PC

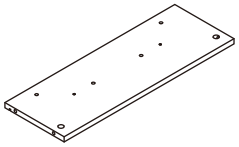

Ⓖ 2PCS

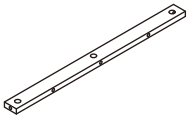

Ⓐ 1PC

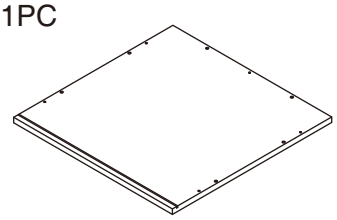

Ⓑ 1PC

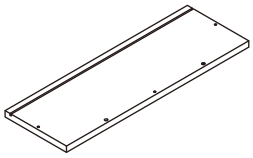

Ⓜ 2PCS

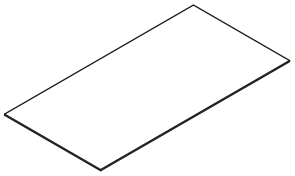

Ⓙ 1PC

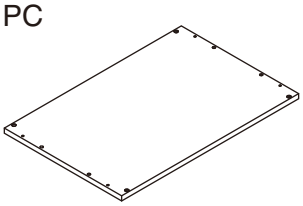

Ⓚ 2PCS

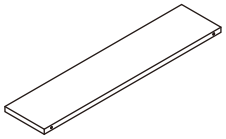

Ⓛ 2PCS

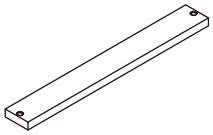

Ⓗ 2PCS

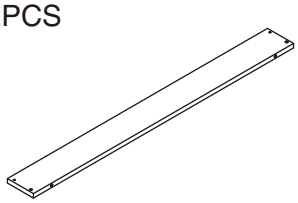

Ⓘ 2PCS

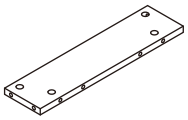

Ⓝ 1PC

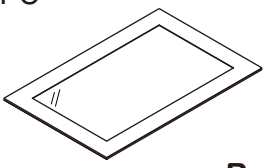

Body

ASSEMBLY INSTRUCTIONS

1

Hardware ① x18PCS
Hardware ③ x8PCS

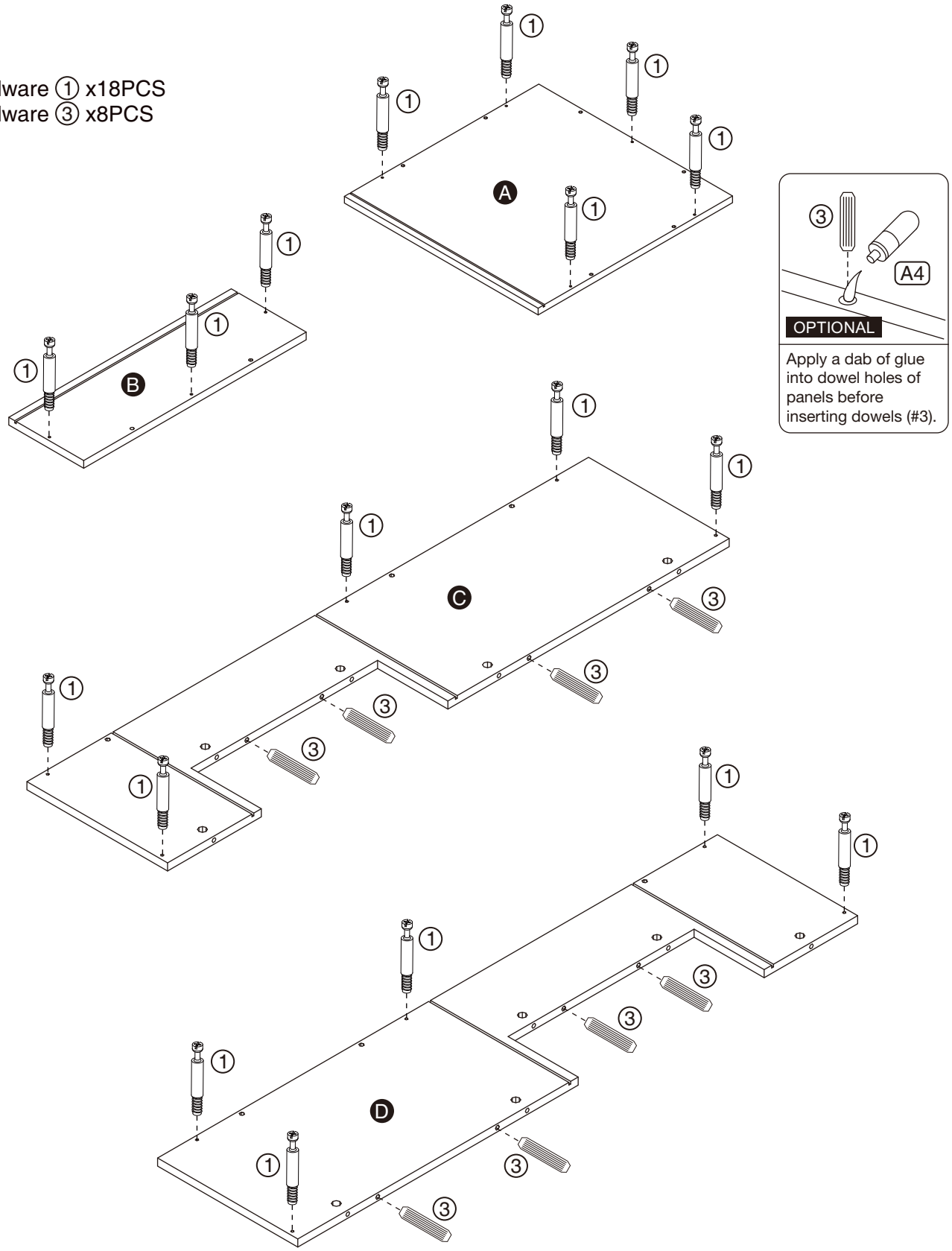

ASSEMBLY INSTRUCTIONS

2

Hardware ① x12PCS
Hardware ③ x22PCS

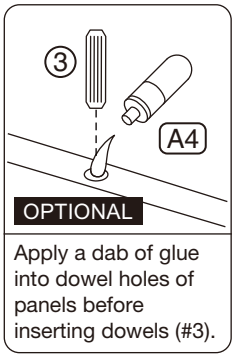

Apply a dab of glue into dowel holes of panels before inserting dowels (#3).

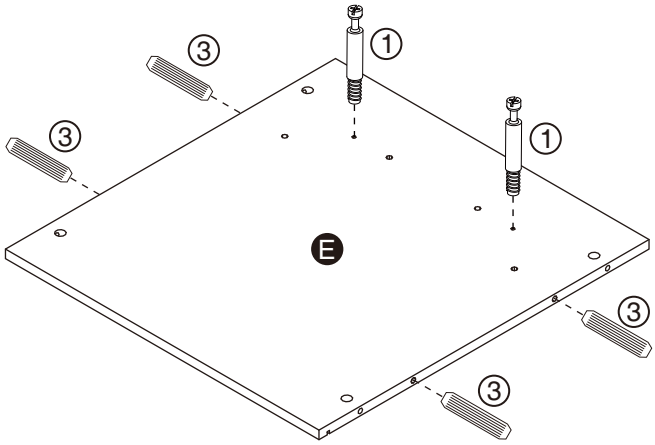

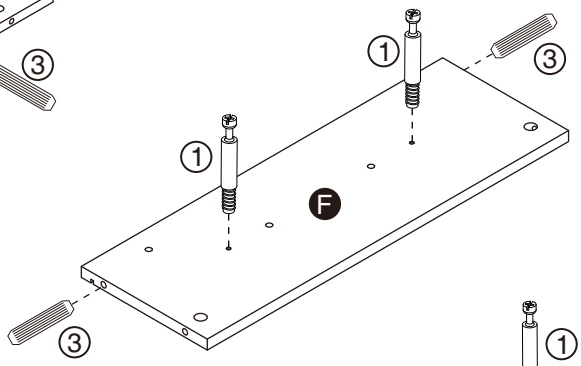

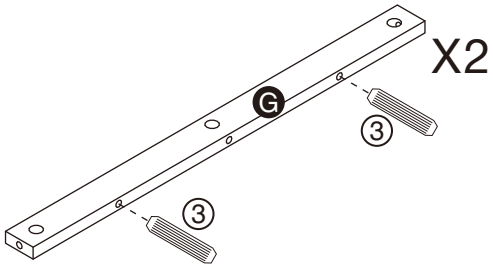

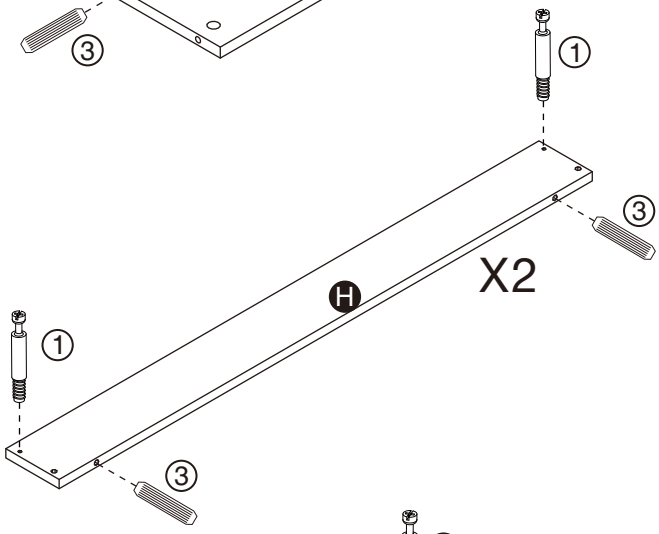

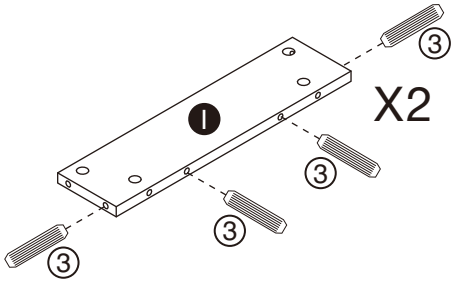

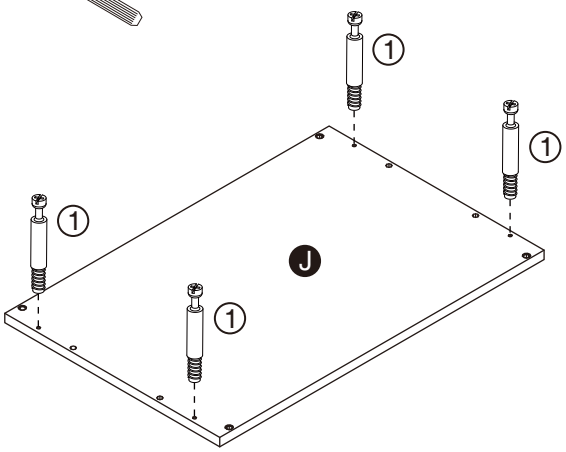

ASSEMBLY INSTRUCTIONS

3

Part Ⓓ x1PC
Part Ⓖ x2PCS

Hardware ② x2PCS

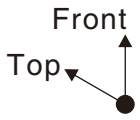

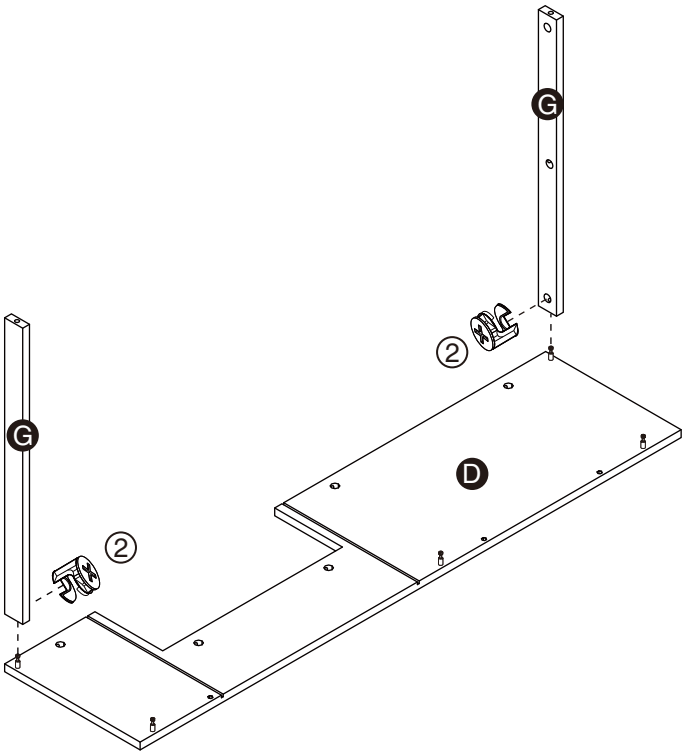

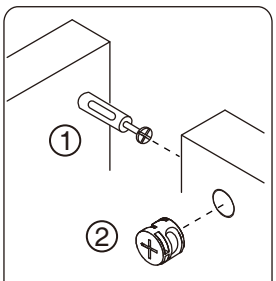

Please refer to page 5 for detailed instructions on how to fasten cam locks (#2) to cam bolts (#1).

4

Part Ⓔ x1PC
Part Ⓕ x1PC

Hardware ② x3PCS

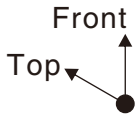

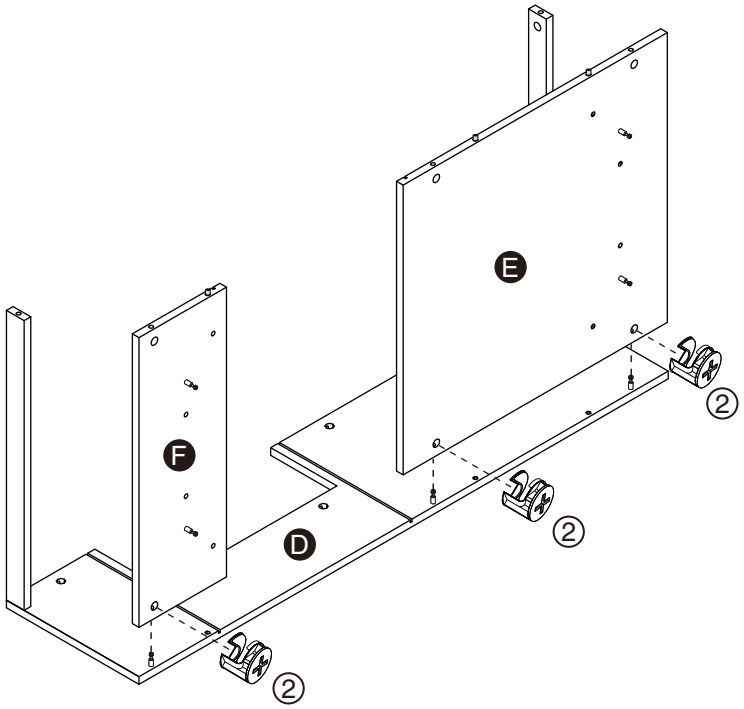

ASSEMBLY INSTRUCTIONS

5

Part Ⓒ x1PC

Hardware ② x5PCS

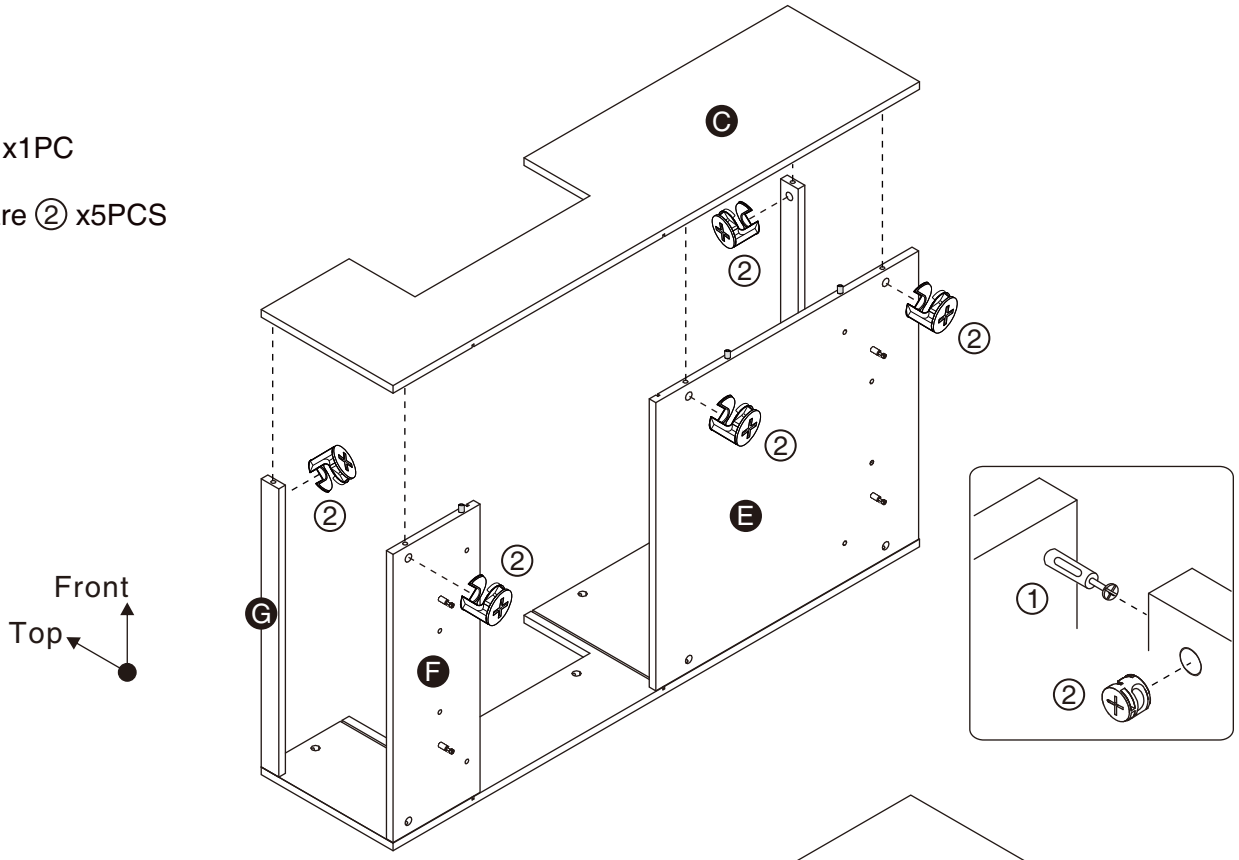

6

Part Ⓐ x1PC
Part Ⓑ x1PC
Part Ⓜ x2PCS

Hardware ② x8PCS

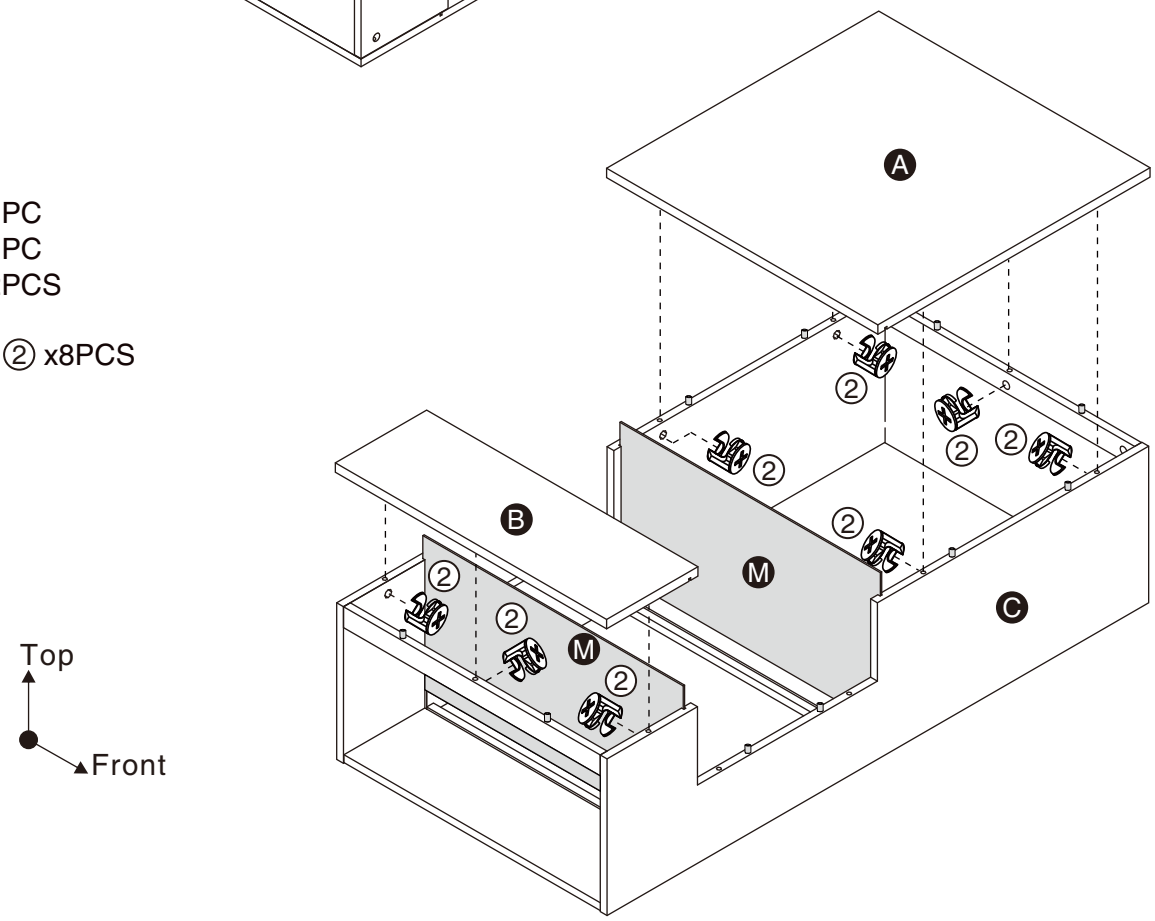

ASSEMBLY INSTRUCTIONS

7

Hardware ⑤ x8PCS
Hardware ⑥ x8PCS

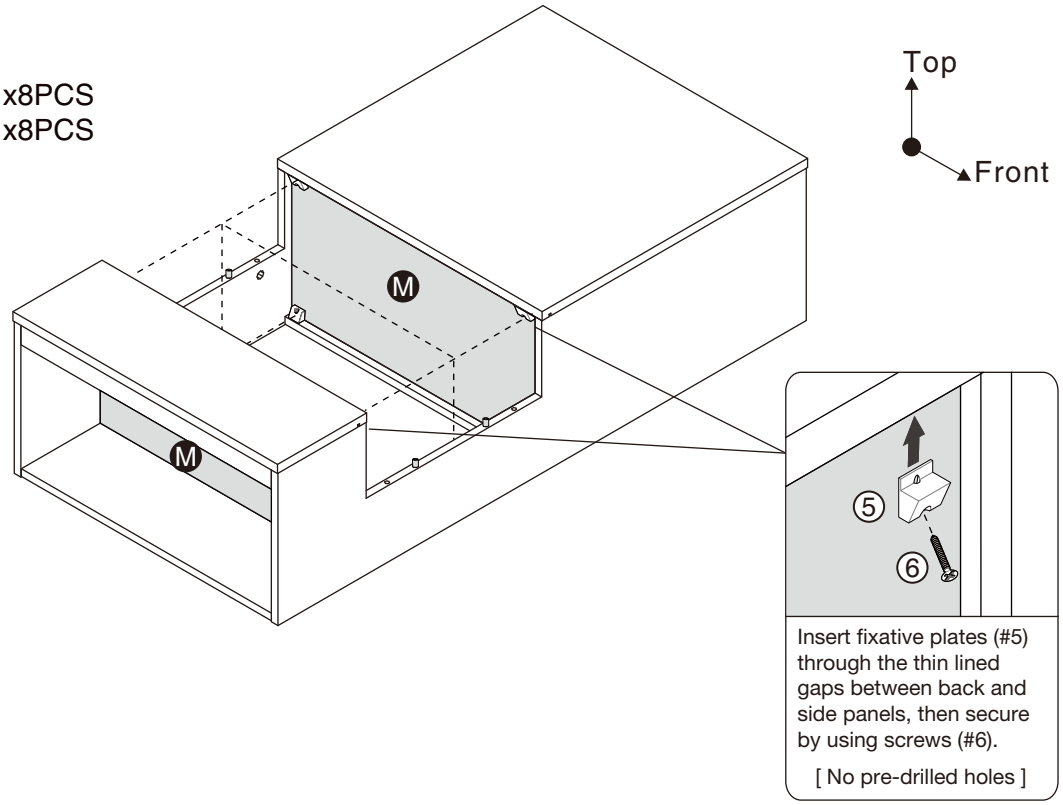

Insert fixative plates (#5) through the thin lined gaps between back and side panels, then secure by using screws (#6).

[No pre-drilled holes]

X8

8

Part K x2PCS
Part L x2PCS

Hardware ④ x4PCS

Accessory A3 x1PC

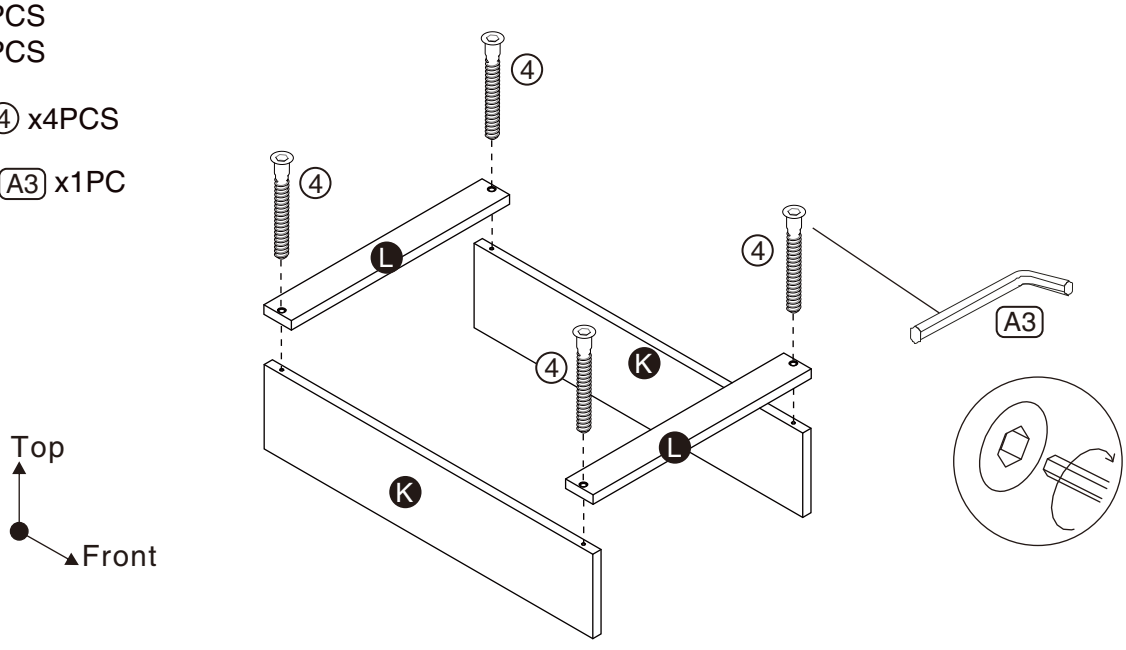

ASSEMBLY INSTRUCTIONS

9

Part J x1PC

Hardware ④ x4PCS

Accessory A3 x1PC

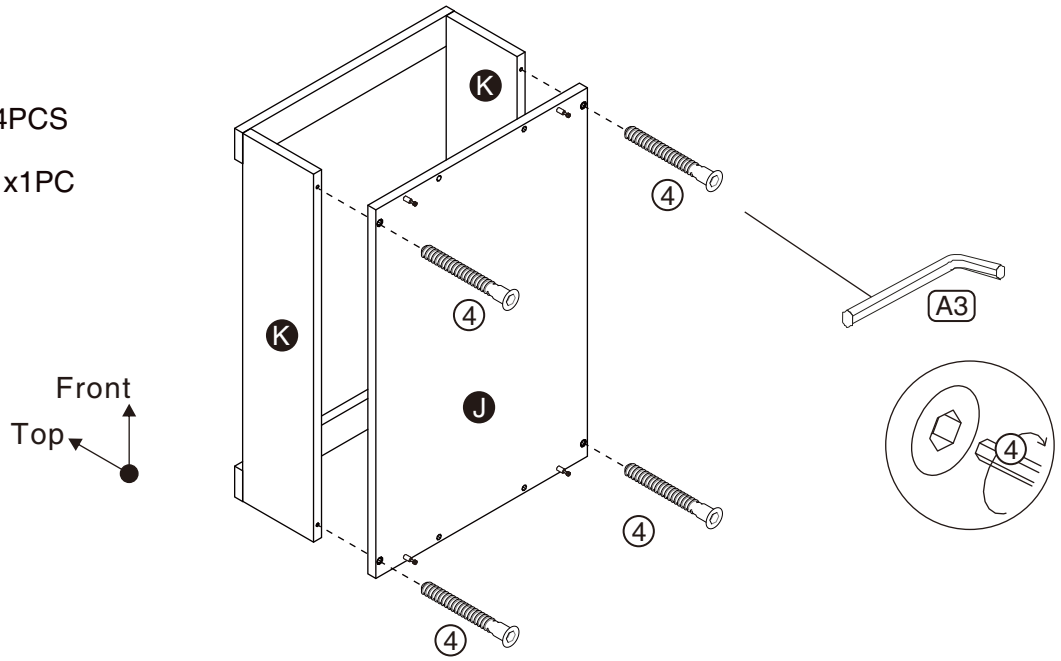

10

Hardware ② x4PCS

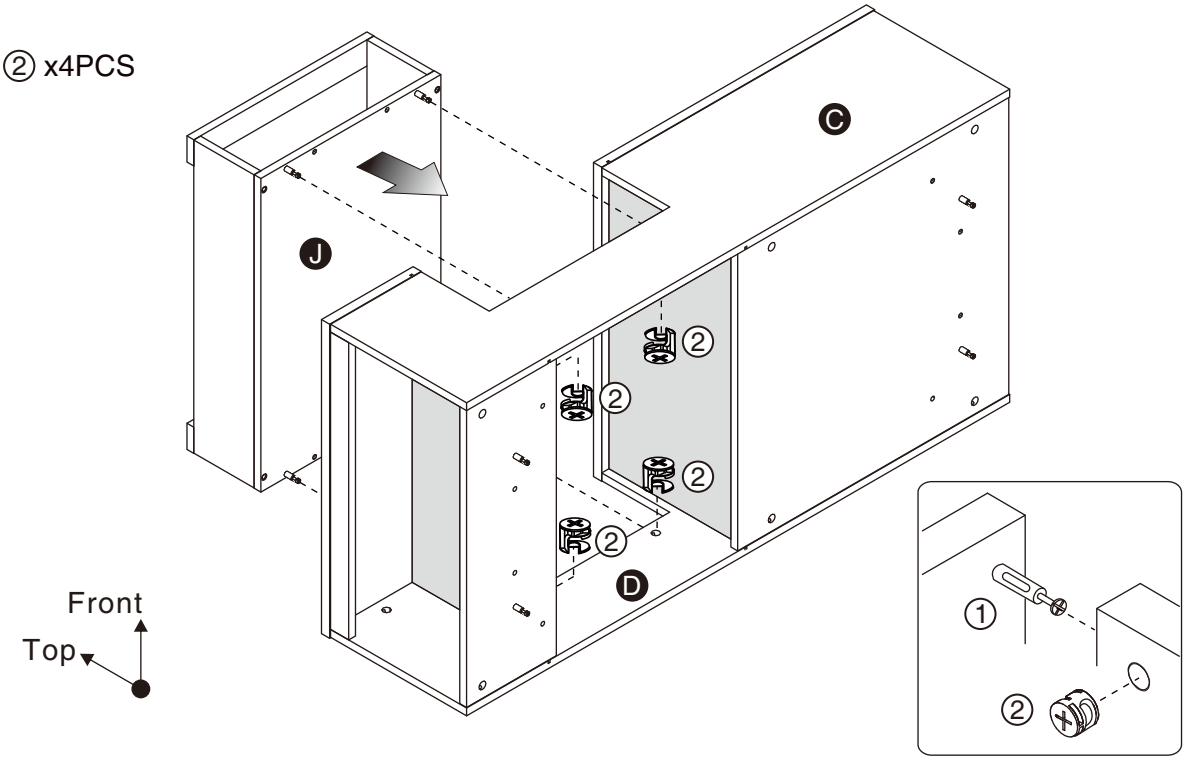

ASSEMBLY INSTRUCTIONS

11

Part H x2PCS
Part I x2PCS

Hardware ② x4PCS

Accessory A1 x6PCS

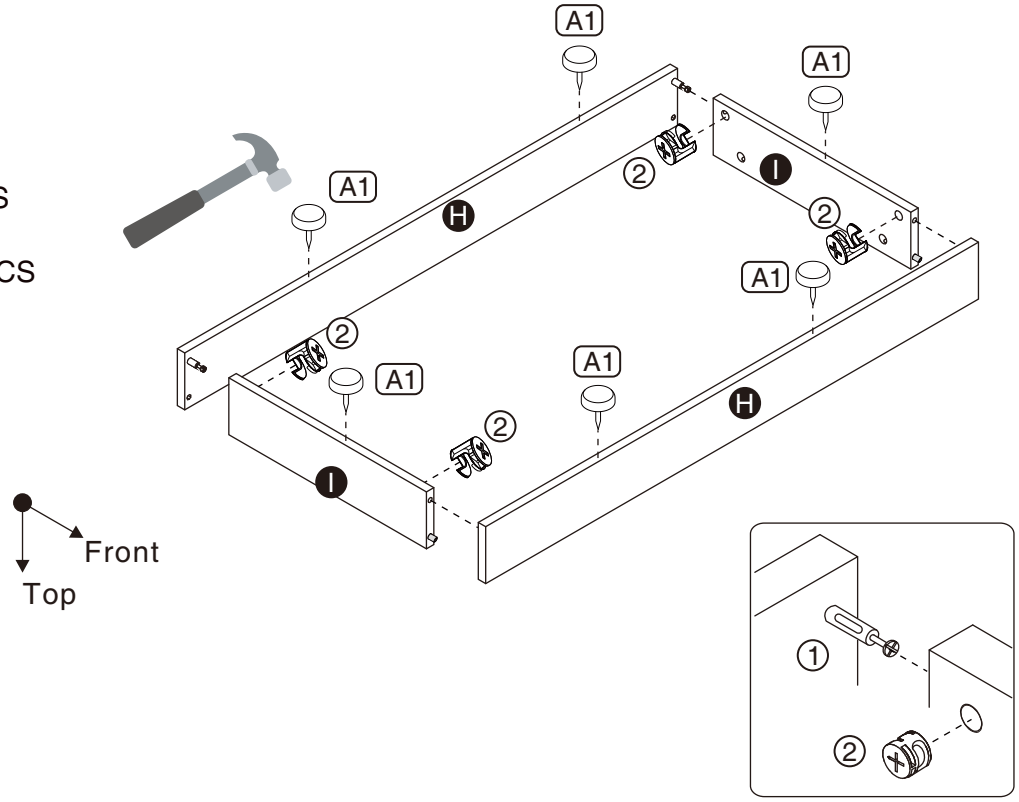

12

Hardware ② x4PCS

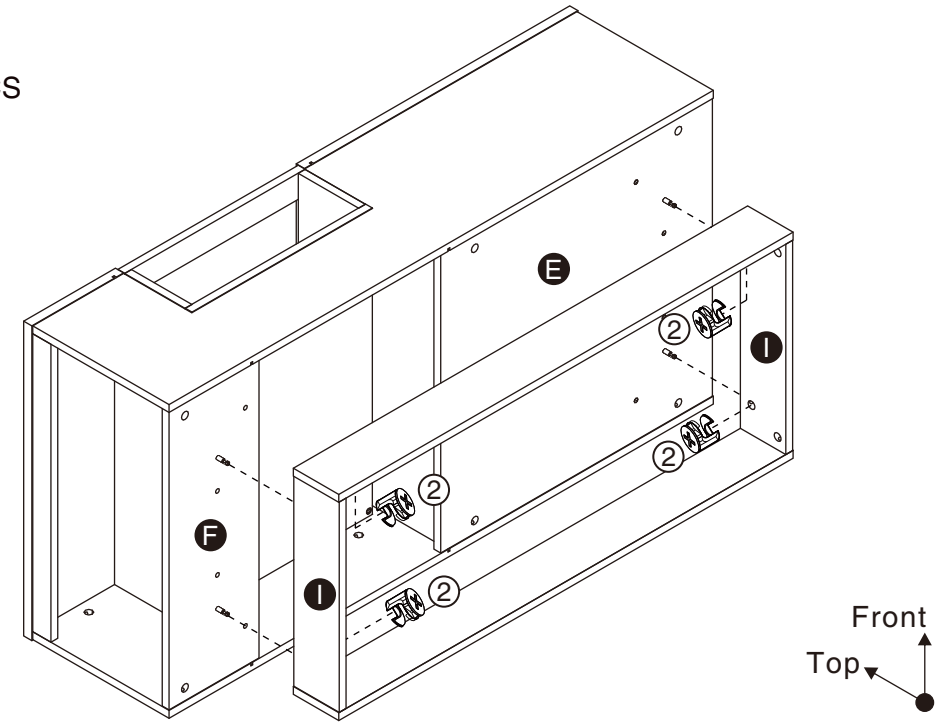

ASSEMBLY INSTRUCTIONS

13

Part Ⓝ x1PC

Accessory [A2] x4PCS

Top

Front

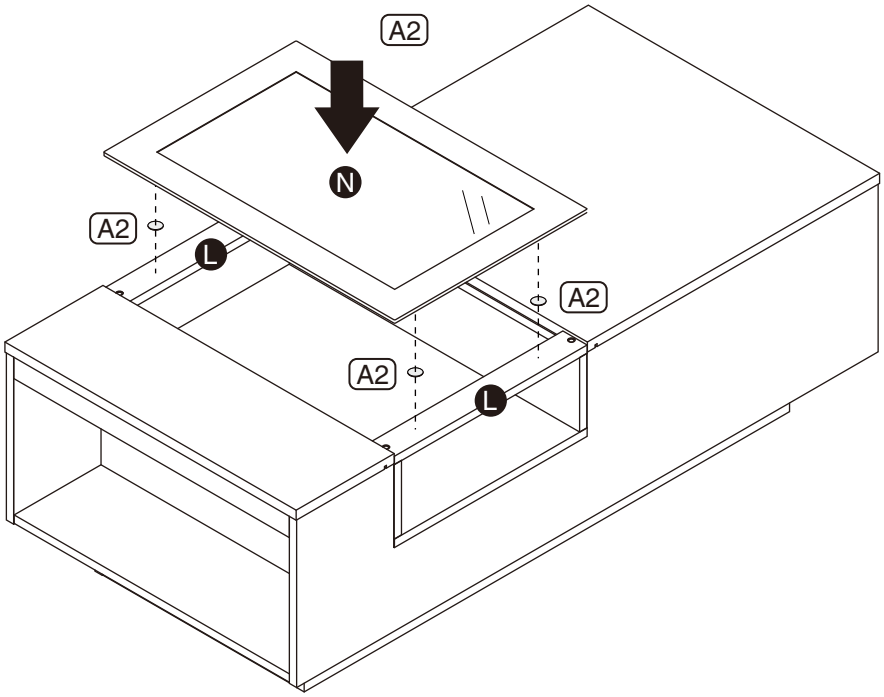

14

ASSEMBLY COMPLETED

Please ensure the furniture rests on an even and flat surface. If the produst wobbles or feels loose,double-check all bolts and/or screws are properly tightened and secured.

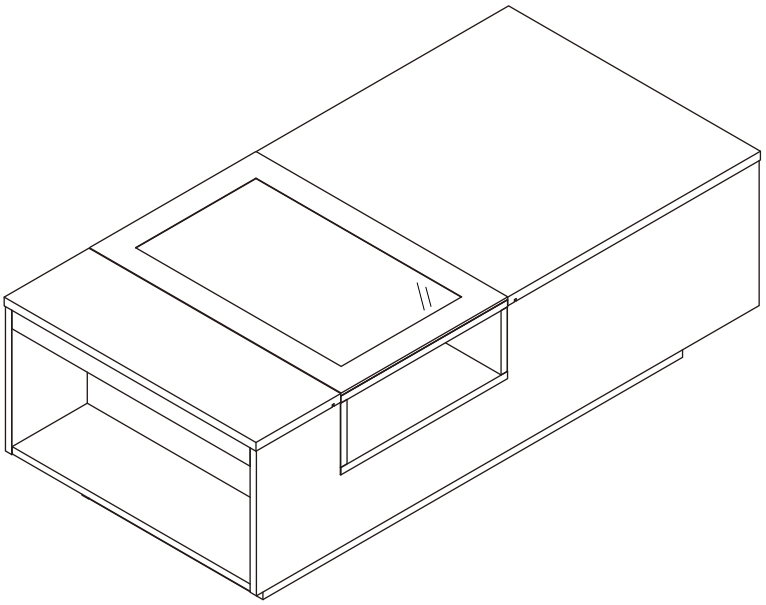

Keep this handy!

Please retain this instruction manual and any order-related information for future reference.